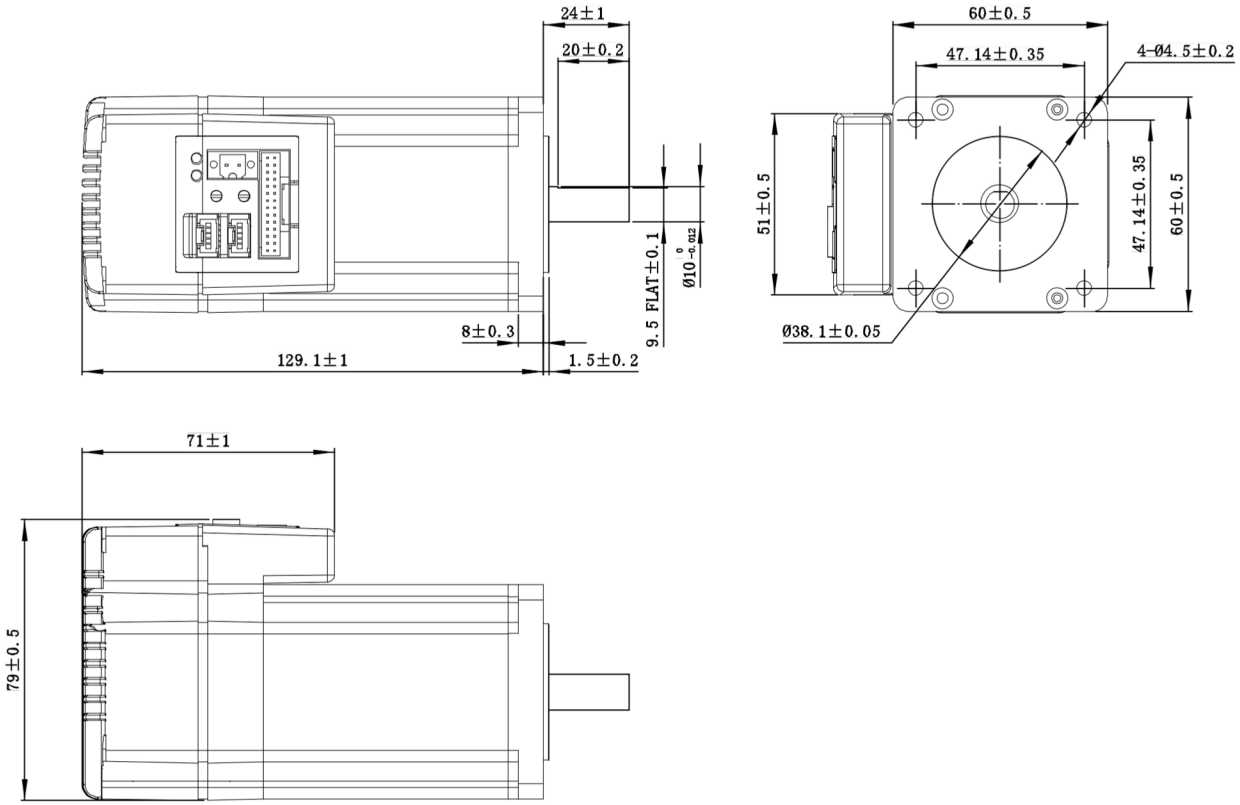

					TSM24C-3CG			
A0			Change					
Mark			Order No.	Date		Drawing stage	Weight	Scale
Design				Process		D		1:1
Check				Verify		Sheet	1/1	
Approve								

1/1