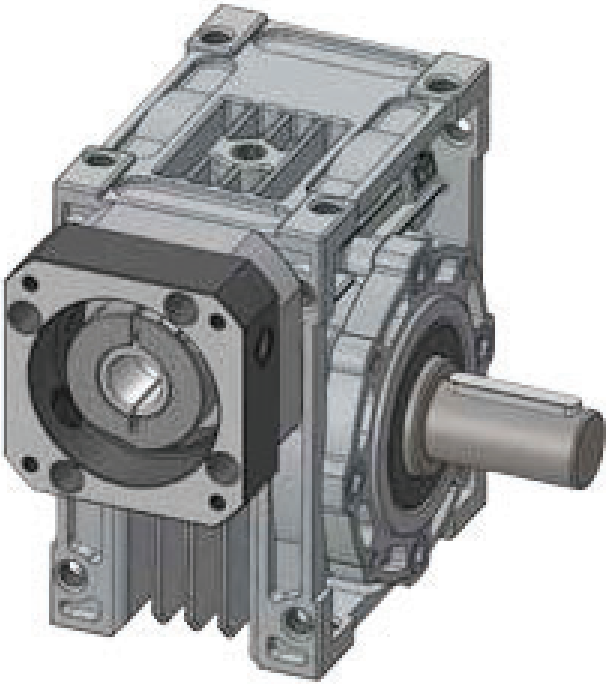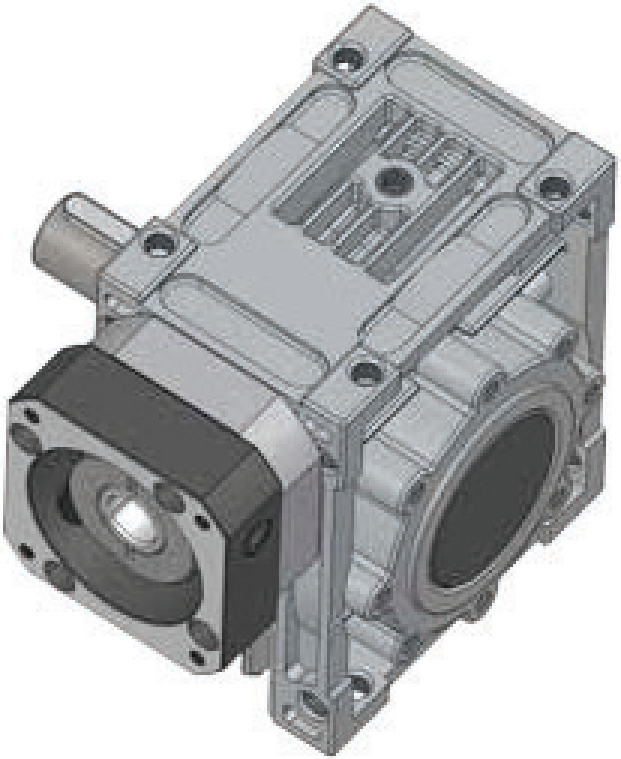R	L