We reserve all rights to this drawing, to any patents or patent registrations related hereto, and to the duplication, retransmission by third parties and misc. use. Any use of this drawing is not permitted without the written consent of STABILUS.

Intended for internal use and customer

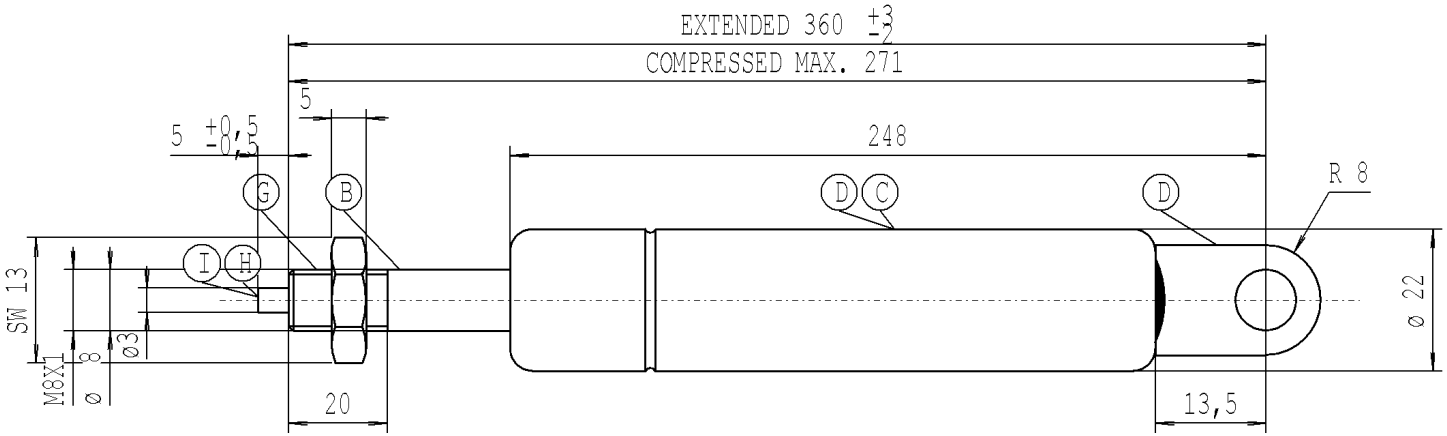


STABILUS
BLOC-O-LIFT

NICHT OEFFNEN HOHER DRUCK
DO NOT OPEN HIGH PRESSURE
Stabilus Standard

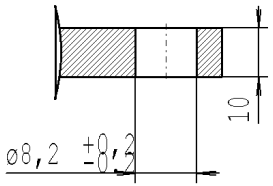


- The gas spring must not be mechanically modified or damaged.
- The warning label must not be removed or obscured.
- compression and extension forces measured acc. to STAB-Spec. 10009033
- Spring test with piston rod downwards

- Protect piston rod from dirt, paint and damage
- Disposal acc. to STAB-Spec.10009375
- Drawing not true-to-scale
- Locking force at +20° C
  in extension 600 N
  in compression 6500 N
- release-force of valve acc. to STAB-Spec. 10005233
- Observe installation instructions according to STAB-Spec. 10005593
- Permissible operating temperature range -30°C to +80°C
- Installation: position any as required
- To release:
  press dia. pin by min. 2.5 mm
  Locking:
  release the pin completely
- To achieve the max. extension speed press release pin by min. 3.5 mm

- Free extension of piston rod not guaranteed because of lower F1-force. (F1 < 200N)
  Release valve and move piston rod by manual push or pull operation.

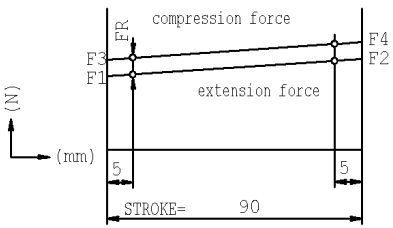


FRmax=F3-F1

X=F2/F1=1,60
Nozzle 2xø2.0

| | |
|---|---|
| B | Nislide black |
| C | print white |
| D | black painted |
| G | max. tightening torque: 10 Nm |
| H | Shearing burr max. 0.2 mm |
| I | bonderized |

Forces (statically measured)

| F1 (N) | F4 max (N) | FR max (N) |
|---|---|---|
| extension force 150±40 | compression force 410 | friction 60 |

| CHANGE | | |
|---|---|---|
| NEW | SERIE | ÜBERARBEITUNG |
| OLD | VERSUCH | – – |
| CHG.NO. | 606712 | 608094 |
| NAME | 4.9.13 SCHÄFER | 17.1.14 SCHÄFER |
| NO. | 1 | 2 |

DIMENSIONS WITHOUT TOLERANCE +/-1

BLOC-O-LIFT

06 31 0819 15 090

Unregistered Copy
Print-out is not subject to the modification service

STABILUS

Modifications in favour of technical process reserved

| DRAWING | | CHECKED |
|---|---|---|
| DATE 27.08.2013 | | NAME C.Toader |

Document No. 10206013

510997

E

***** Druckdatum: 18.01.2014 / 07:09:20 ***** Ausdruck nicht massstabtreu *****